LOC	DIST
BD	35

REVISIONS

P	LTR	DESCRIPTION	DATE	DWN	APVD
	H1	REVISED PER ECO-11-004820	11MAR11	RK	HMR

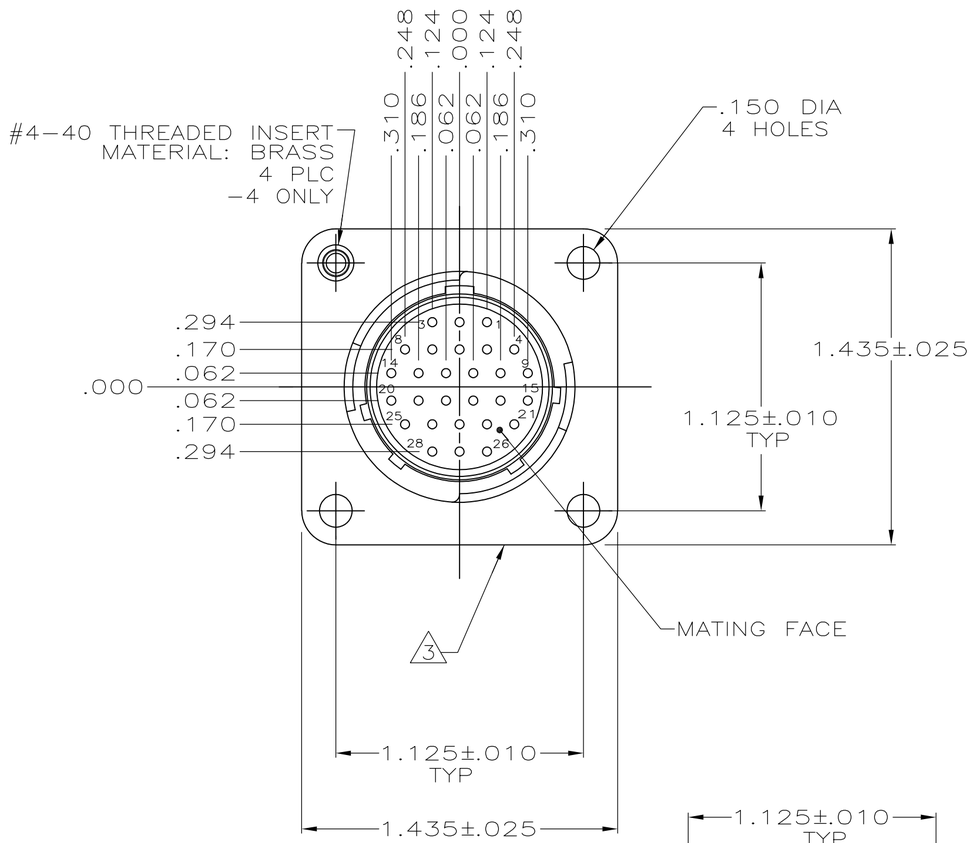

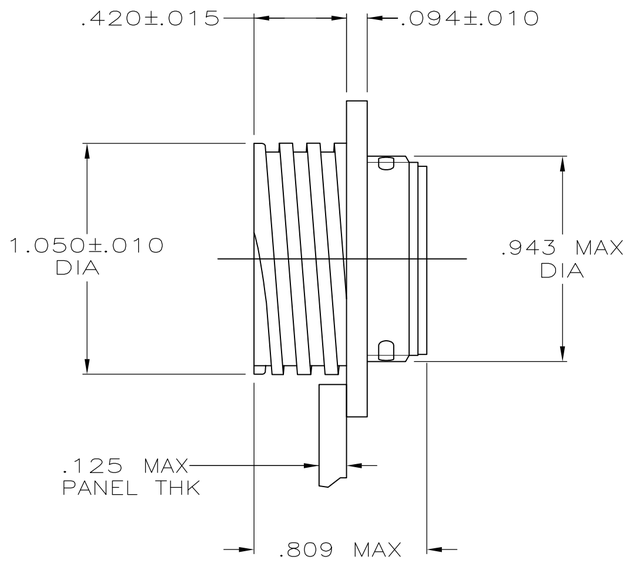

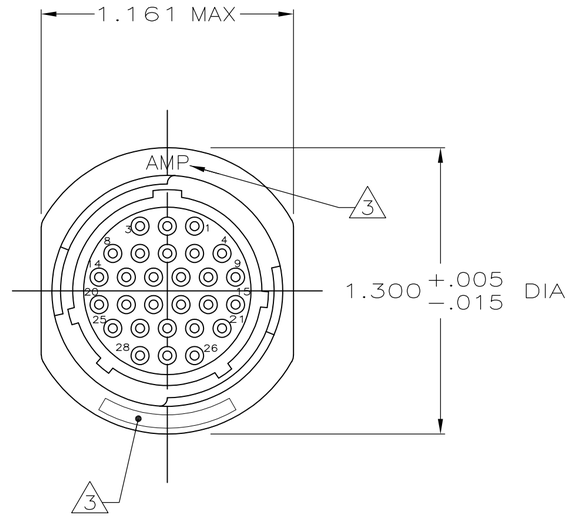

FREE HANGING
(-2 ONLY)

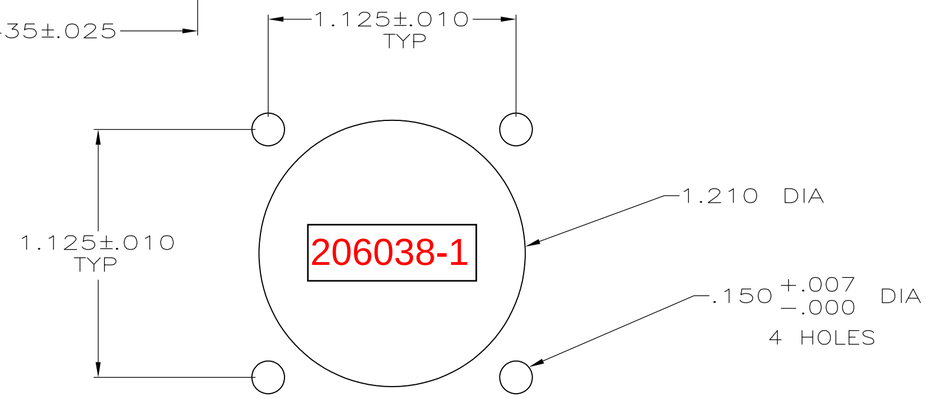

PANEL CUTOUT

206038-4
206038-2
206038-1

PART NUMBER

1. CONTACT CAVITIES IDENTIFIED BY CHARACTERS ON FRONT AND REAR FACES OF CONNECTOR.
2. WILL ACCEPT (28) SIZE 20 SOCKET CONTACTS.
3. AMP AND PART NUMBER THIS AREA.

THIS DRAWING IS A CONTROLLED DOCUMENT.

DIMENSIONS: INCHES

TOLERANCES UNLESS OTHERWISE SPECIFIED:
0 PLC ± -
1 PLC ± -
2 PLC ± -
3 PLC ± .005
4 PLC ± -
ANGLES ± -

MATERIAL: THERMOPLASTIC, BLACK
FINISH: -

DWN A.STAUB BG 4/5/91
CHK W.G.LENKER 7-24-92
APVD K.BEAVER 7-24-92
PRODUCT SPEC 108-10024
APPLICATION SPEC -
WEIGHT -

TE Connectivity

NAME: RECEPTACLE ASSEMBLY, REV SEX, SERIES 2, 17-28, CPC

SIZE	CAGE CODE	DRAWING NO	RESTRICTED TO
A2	00779	C-206038	-

CUSTOMER DRAWING | SCALE 2:1 | SHEET 1 OF 1 | REV H1

206038

1471-9 (3/11)